versatile™ 4C Pedestal Mount Mailbox, 4C16S-09-P

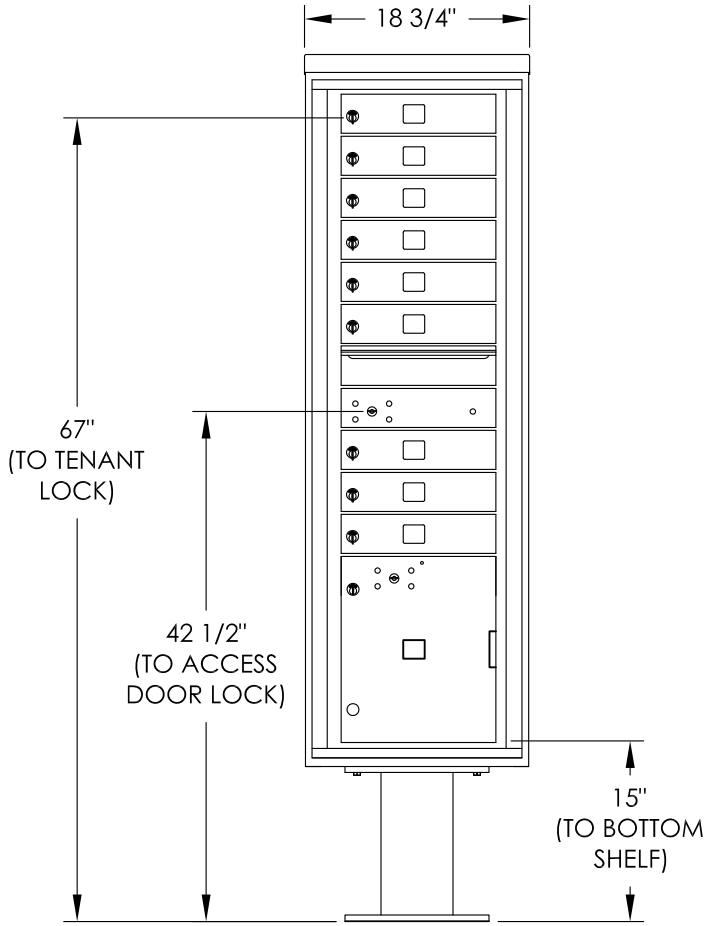

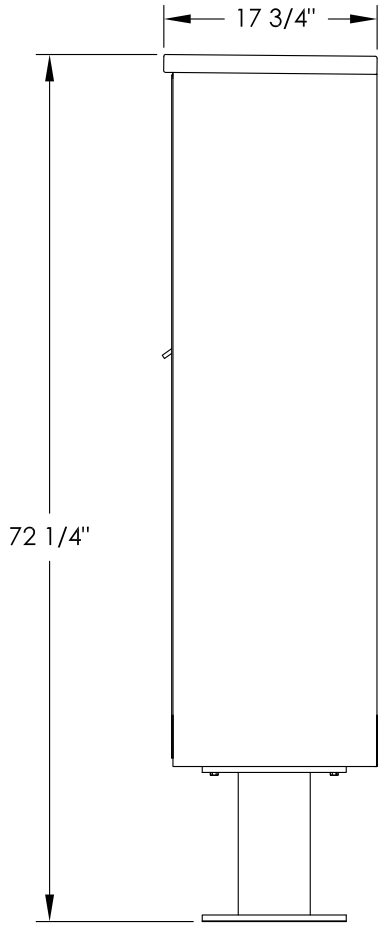

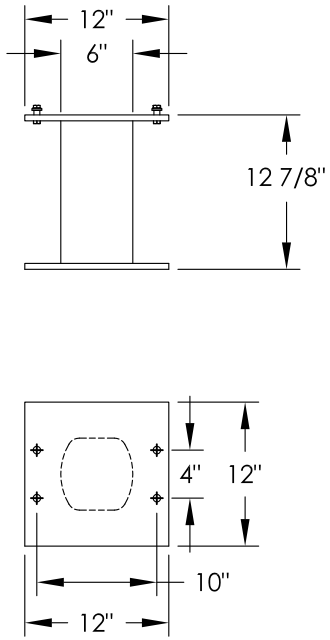

PEDESTAL DETAIL

COMPARTMENT CHART

DESCRIPTION	COMPARTMENT	COMPARTMENT SIZE	QTY.
MAILBOX	MB1	3" H x 12" W x 15" D	9
OUTGOING MAIL	OM2	6-1/2" H x 12" W x 15" D	1
PARCEL	PL15	15" H x 12" W x 15" D	1

NOTES:
1. 4C pedestal units are for private applications only / not USPS Approved.
2. May be installed outside or inside - see foundation specification details within the 4C Installation Manual.

PRODUCT SERIES: VERSATILE™ 4C PEDESTAL MOUNT

FLORENCE manufacturing company
5935 Corporate Drive • Manhattan, KS 66503
www.florencemailboxes.com • (800) 275-1747
A GIBRALTAR INDUSTRIES COMPANY

MODEL 4C16S-09-P		REV D	
SCALE NONE		LAST REV DATE 5/16/2014	
DRAWING NUMBER 4C16S-09-PCS		DRAWN BY SDH	